A21 PRH

Enclosed tube welding tool

In an increasing number of applications, such as construction and repairs in the food, pharmaceuticals and semi-conductor industries, there is a requirement that the welding arc is protected from the negative effects of air on the weld. It is therefore necessary to use an enclosed tool to protect the joint with a shielding gas.

ESAB's PRH tube welding tool is designed to carry out welding, without any use of filler material, of thin-walled stainless steel tubes in order to provide maximum gas shielding around the tube. The tool is structured according to the chamber principle to achieve this shielding. This means that the rotating components and the Tungsten electrode are enclosed in a gas chamber formed by the outer casing which also embodies the clamping arrangement for the tube to be welded.

Since the gas shielding is not affected by the surrounding environment, this tool can also be used for welding in places where it is normally not suitable to use open headed tube welding.

The tube welding tool is water-cooled and forms a complete unit which also incorporates the work return cable. It is available in three sizes:

PRH 3-12 which is an ultrathin micro weld head for all types of Microfittings. It covers the tube range from 3 to 12.7 mm OD. PRH 3-12 is water-cooled and especially designed for the semi-conductor industry but is also ideal for all types of applications where the clearances are very limited.
PRH 3-38 and PRH 6-76 have a powerful water cooling, are very thin and covers the rube range from 3 mm to 38.1 mm and 6 mm to 76.2 mm OD.
A clamping system with collets for all tube diameters within the working range for each tool ensures precise alignment of the parts to be welded. With the quick-changing system for changing the collets, no extra tool is needed.

Cartridge C
+ Collets C for PRH 3-12

Cartridge MF for PRH 3-12

For PRH 3-12 there is either a removable cartridge (MF) for each diameter, for very small clearances or a cartridge (C) with exchangeable collets for each diameter if there is space enough.

All three heads are equipped with encoder motors for precise positioning of each sector when welding with different sets of parameters.

PRH tools can be used in conjunction with ESAB's orbital TIG power source Aristo™ MechTig C2002i or power source Aristo™ MechTig 4000i combined with control box Aristo™ MechControl 2 or 4.
Since this type of welding does not utilise large amounts of power, an Aristo™ MechTig C2002i power supply fitted with a cooling unit will be perfectly satisfactory for use with the PRH tool.

Tube-to-tube welding head	PRH 3-12	PRH 3-38	PRH 6-76
Rate of rotation, rpm	0.65-12.6	0.5-9.5	0.31-6.15
Tube OD, mm	3-12.7	3-38.1	6-76.2
Max. continual welding current at 100% duty cycle, water-cooled, A	15	50	60
Max. pulsed welding current, water-cooled, A	40	100	100
Electrode diameter, mm	1.0	1.6/2.4	1.6/2.4
Weight (with cables), kg	5.0	6.5	7.5

Ordering information

Welding head PRH 3-12	0444 300 880
Welding head PRH 3-38	0444 301 880
Welding head PRH 6-76	0444 302 880

Collets + Cartridge PRH 3-12

Cartridges

Cartridge MF 6.0 mm	0444 310 881
Cartridge MF 6.35 mm	0444 310 882
Cartridge MF 8.0 mm	0444 310 883
Cartridge MF 9.53 mm	0444 310 884
Cartridge MF 10.0 mm	0444 310 885
Cartridge MF 12.0 mm	0444 310 886
Cartridge MF 12.7 mm	0444 310 887

Cartridge C and Collets for cartridge C, one set, four halves

Cartridge C	0444 310 880
Collets C blanks	0444 311 001
Collets C 6.0 mm	0444 311 002
Collets C 6.35 mm	0444 311 003
Collets C 8.0 mm	0444 311 004
Collets C 9.53 mm	0444 311 005
Collets C 10.0 mm	0444 311 006
Collets C 12.0 mm	0444 311 007
Collets C 12.7 mm	0444 311 008

Collets	PRH 3-38	PRH 6-76
Collets, one set, four halves		
Collets, blanks	0444 312 001	0444 313 001
Collets 6.0 mm	0444 312 002	0444 313 002
Collets 6.35 mm	0444 312 003	0444 313 003
Collets 8.0 mm	0444 312 004	0444 313 004
Collets 9.53 mm	0444 312 005	0444 313 005
Collets 10.0 mm	0444 312 006	0444 313 006
Collets 12.0 mm	0444 312 007	0444 313 007
Collets 12.7 mm	0444 312 008	0444 313 008
Collets 13.5 mm	0444 312 009	0444 313 009
Collets 17.2 mm	0444 312 010	0444 313 010
Collets 18.0 mm	0444 312 011	0444 313 011
Collets 19.05 mm	0444 312 012	0444 313 012
Collets 21.3 mm	0444 312 013	0444 313 013
Collets 22.0 mm	0444 312 014	0444 313 014
Collets 25.4 mm	0444 312 015	0444 313 015
Collets 26.9 mm	0444 312 016	0444 313 016
Collets 28.0 mm	0444 312 017	0444 313 017
Collets 29.0 mm	0444 312 018	0444 313 018
Collets 31.8 mm	0444 312 019	0444 313 019
Collets 33.7 mm	0444 312 020	0444 313 020
Collets 34.0 mm	0444 312 021	0444 313 021
Collets 35.0 mm	0444 312 022	0444 313 022
Collets 38.1 mm	0444 312 023	0444 313 023
Collets 40.0 mm		0444 313 024
Collets 41.0 mm		0444 313 025
Collets 42.4 mm		0444 313 026
Collets 48.3 mm		0444 313 027
Collets 50.8 mm		0444 313 028
Collets 52.0 mm		0444 313 029
Collets 53.0 mm		0444 313 030
Collets 60.3 mm		0444 313 031
Collets 63.5 mm		0444 313 032
Collets 70.0 mm		0444 313 033
Collets 76.1 mm		0444 313 034
Collets 76.2 mm		0444 313 035
None-conductive cooling water for PRH		0007 810 012

PRH 3-12

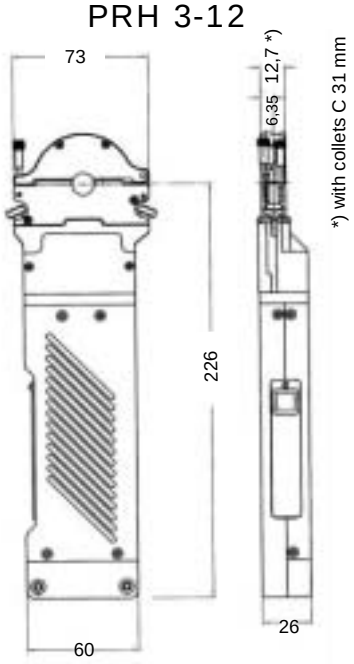

PRH 3-38

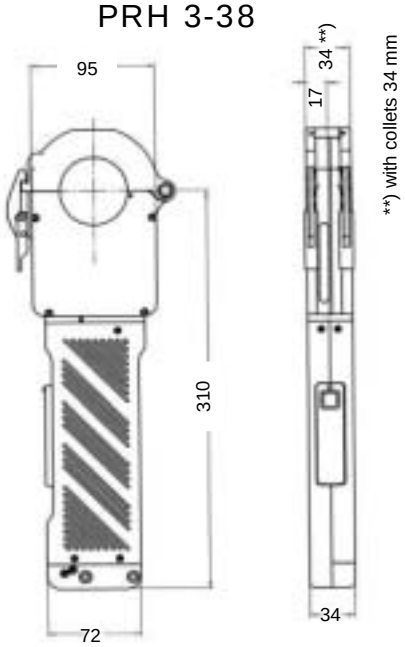

PRH 6-76

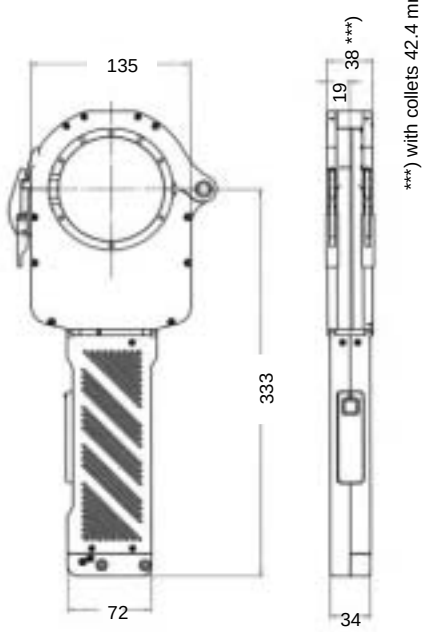

2006-12-01 / ESAB reserves the right to alter specifications without prior notice

ESAB AB
Welding Equipment
SE-695 81 LAXÅ SWEDEN
Phone: +46 584 81000
Fax: +46 584 411721
E-mail: info@esab.se
www.esab.com

ISO 9001:2000